Issue 01/2004

Porsche **Engineering** Magazine

Good Vibrations:
Modern anechoic chambers with state-of-the-art measuring and testing equipment enable efficient analyses of individual components and complete vehicles.

Lightweight Material for Vehicle Construction:
With the Carrera GT, Porsche is the first manufacturer to put magnesium components within view of the driver.

Networked Systems:
In addition to familiar networking architectures, Porsche is using a new fiber optic based technology (MOST) in the Cayenne.

Contents

The Porsche Engineering Group GmbH (PEG), a subsidiary of Dr. Ing. h.c. F. Porsche AG, is responsible for the sports car constructor's global contract development activities.

Porsche is the only car manufacturer to make its extensive engineering knowledge available to international customers from various sectors.

In conjunction with its domestic and foreign subsidiaries, Porsche Engineering provides expertise on a global scale in the fields of automotive engineering and transport under the brand Porsche Engineering.

Porsche Engineering has access to the resources of more than 3,000 engineers from construction, prototype-built, production planning, procurement, logistics and production divisions.

Would you like to know more about Porsche Engineering? To request our new image brochure, simply send an e-mail to:
stefanie.landenberger@porsche.de

Insights

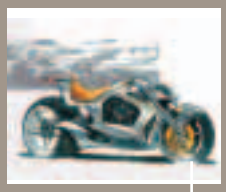

Electrics & Electronics — Industrial Engineering — **Styling** — Production Support

Dear Readers

In specific terms, our acoustic engineers are listening out for sounds and vibrations from engines, components and even agricultural machinery that arrives for a sound check via Porsche Engineering at the Weissach Development Centre.

Good vibrations – for us at Porsche Engineering, this is what it is all about.

The efficient analyses performed by the engineers in state-of-the art sound measurement chambers, equipped with the very latest in technology, form the basis for Porsche acoustic design.

Porsche designers concentrate on appropriate and functional styling and do not limit themselves to four-wheeled objects. When it comes to two wheels also – coming back to the subject of good vibrations – the stylists again prove themselves to be exceptionally creative: the Porsche design studios in Weissach and Huntington Beach (Los Angeles) also provide an all-round service for motorbikes, from the initial drawing right up to completion of the entire model.

With the Cayenne, Porsche entered new realms in communication and data transfer between electronic control modules. The MOST-based (Media Oriented Systems Transport) infotainment system guarantees good vibrations from the loudspeakers during your journey.

Have fun reading the latest news.

Your editorial team.

Good Vibrations Thanks to State-of-the-Art Measuring and Testing Equipment

On a single-axis roller test stand, measurements can be performed up to speeds of 300 kilometers per hour.

At Porsche, studies into vehicle acoustics and vibrations have a tradition stretching back more than 30 years. State-of-the-art anechoic chambers offering the best in modern technology enable the efficient analysis of cars and their individual components.

The acoustic technicians at Porsche are responsible for everything that contributes to the unmistakable sound of these sports cars, and specifically for ensuring that this sound is not impaired. They do not limit themselves exclusively to Porsche cars however: their many years of experience are also put to good use in customer projects, indeed often for customers from completely different areas of industry. Their work focuses primarily on optimizing directly those components that cause the interfering noises or vibrations. Only then do they resort to secondary measures whereby the offending sources are attenuated or insulated.

Studies into acoustics and vibrations encompass a broad field. In the Sound Engineering section, interior and exterior noises are processed and optimized. The characteristic sound of the brand, for example of the engine, is the very lifeblood of Acoustic Design. Rattles, creaks and squeaks, on the other hand, are the domain of the

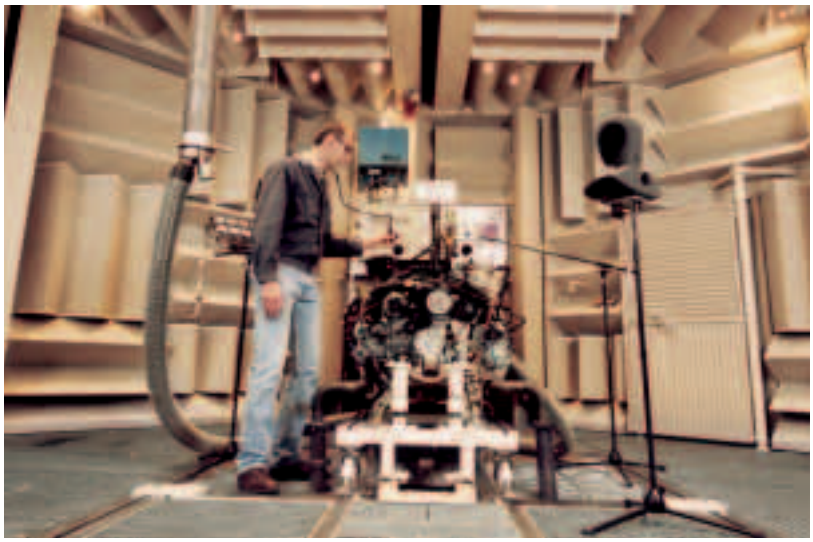

The octagonal anechoic chamber for engines is clad with a new type of perforated sheet wedge and largely fulfils accuracy class 1 for the frequency range for engine noises.

Acoustic Quality section, where the technicians work to design the best possible subjective sound impression. With the help of noise source analyses, the causes of interfering noises are tracked down and dealt with in a concerted fashion.

In addition to acoustic optimization, the area of vibration comfort is of great importance. The engine and vehicle anechoic chambers at the Porsche Development Center in Weissach were modernized specifically to be able to conduct these multiple studies using the latest, state-of-the-art equipment in an appropriate environment.

Before a vehicle reaches one of the acoustic test stands, however, it must first run a few circuits on the "status track", so that the acoustic technicians can quickly gain a first impression of the situation and then determine how they should proceed and what test stands are required.

Next, the vehicle is prepared for the tests and the measurement equipment is hooked up. Specialist Porsche engineers from the most varied of backgrounds ensure that the specimen is optimally equipped, thus avoiding costly and time-intensive rework in the test chamber.

Octagonal anechoic chamber for engines

One particular highlight of the Porsche Acoustics department is the modernized, octagonal engine anechoic chamber. This architectural structure approximates the spherical shape that is so optimal for acoustics and with which deep frequencies are also well absorbed. The chamber is lined with a new type of perforated sheet wedge and largely fulfills accuracy class 1 in the frequency range relevant for engine noises (500 Hertz to 5 Kilo-

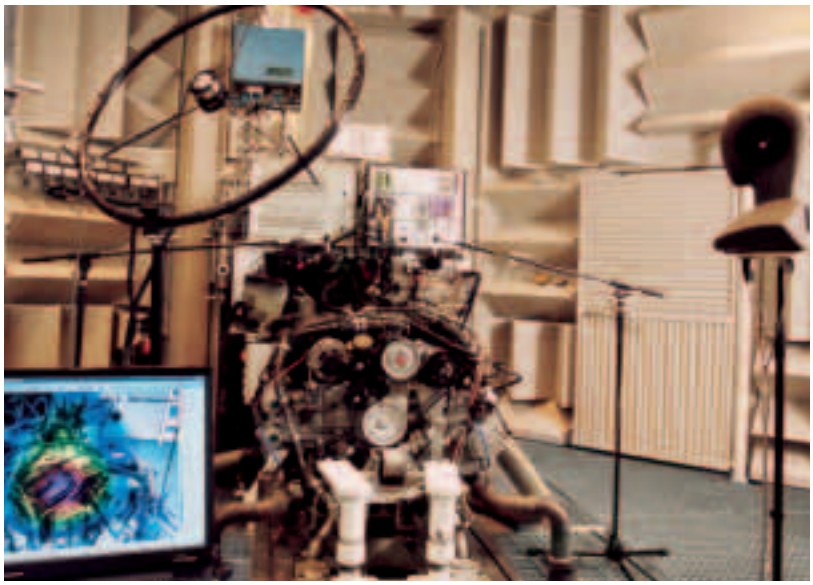

The acoustic camera records the sound field and generates a graphic of the noise distribution. Thus sources of noise can be quickly located.

hertz). Given that it is equipped as a full acoustic chamber, measurements can be taken from all sides, including from beneath the vehicle. The size of the chamber makes it possible to test complete aggregates (engine-gearbox differential), while the acoustic test stand caters for engines with a performance rating of 400 Kilowatt, a maximum torque of 1,500 Newton-meters and a maximum speed of 8,000 rpm. As it also boasts all the functions of a regular engine test stand, emissions and cylinder pressure measurements can also be taken in addition to the noise tests.

The acoustics test stand is equipped with the PumaOpen automation system, which collects measurement data and monitors the test specimens and test stand. It records all the system parameters of the engine electronics during the test and links these with the acoustic and vibration-related evaluations. Thus, for example, newly occurring phenomena are immediately analyzed.

Typical studies conducted in the engine anechoic chamber include the analyses of sound and vibrations in the engines, drivetrains and components in their different operating states. In addition, combustion noises can also be studied.

In the vehicle anechoic chamber, tests are conducted under almost free-field conditions. The acoustic camera (right) helps to locate sources of noise.

Free-field conditions in the vehicle anechoic chamber

Porsche Engineering run acoustic and vibration-related studies on entire vehicles, motorcycles and individual chassis components under state-of-the-art conditions in the large anechoic chamber. With its special design (room in a room) and the highly effective, sound-absorbing full lining (including the floor), conditions approaching free-field are created. The chamber thus corresponds to accuracy class 1.

On the 220-Kilowatt single-axis roller test stand, high-speed measurements (up to 300 kilometers per hour) can be performed on front wheel or rear wheel driven vehicles. Various lining plates or impact strips are mounted as required on the bearing surface of the rollers, in order to simulate different road conditions. As the underside of the vehicle is so easily accessible when the vehicle is on the test stand, it is particularly suitable for acoustic and vibration-related tests on the chassis, powertrain or drivetrain.

The test rig is specifically set up to enable numerous different tests on individual components, assemblies and sections of the car. Thus, complex metrological analyses such as laser-vibrometric recording of a floor assembly, torsional vibration measurements on a drivetrain or the localization of noise sources using the acoustic camera can be performed without difficulty. The operational vibration of individual structures, such as entire floor assemblies or door-trim panels, are analyzed using permanently installed multi-channel metrological equipment.

As the vehicle anechoic chamber is directly linked to an acoustics laboratory, binaural metrology can be used very effectively to perform acoustic design tasks on vehicles or components.

The expertise of some 3,000 Porsche engineers from the most varied of backgrounds is available to the acoustic technicians as and when they need it, enabling them to find the best possible solutions for the customer.

Noise reduction and sound design for motorcycles and agricultural machinery

Porsche Engineering offers its customers the full scope of acoustic and vibration development. If secrecy is desired, all tests can be performed on protected test tracks or in specially secured test rooms.

Porsche acoustic technicians have many years of experience from multitudes of customer projects and our own in-house development. This is put to good use not only for vehicle technology tasks but also in projects from many other branches of industry. Indeed, medical devices, agricultural machinery, motorcycles and even elevators have already successfully passed Porsche sound checks. ■

The acoustic measurement track is protected from inquisitive eyes and mystery model hunters. In this picture external noises are being measured by microphone and recorded.

Magnesium:
Light-Weight Material for Vehicle Construction

The vehicle of the future will be shaped by the increasingly vocal demands of the driving public for greater performance, comfort and security. At the same time, however, there is a growing awareness of environmental issues. Against this background, lightweight construction materials such as aluminum and magnesium are becoming more and more important: light vehicles consume less fuel and thus have fewer emissions.

For the Porsche engineers, the challenge in using magnesium lay in developing components that suited the material.

Magnesium, however, is the only substance that can lay claim to being the lightest metallic construction material available. With a specific weight of 1.74 g/cm^3, magnesium is approximately one third lighter than aluminum and boasts yet another key and environmentally-friendly advantage: it is almost completely recyclable.

The high-performance sports car, the Carrera GT, is an impressive demonstration of what is technically feasible today in the field of automotive materials. For instance, Porsche is the first manufacturer to use magnesium in the center console within view of the driver. The main challenge here lay in developing components to suit the material.

In the high-performance sports car, the Carrera GT, Porsche opted for magnesium, predominantly because of the high quality of the components and its high-value appearance. They used magnesium for the front panel on the center console, various controls, the door handles and, of course, the wheel rims. The ease of malleability of this material and its great durability proved to be hugely advantageous. The challenge for Porsche lay essentially in developing components that suited the material, i.e. components that utilized magnesium's advantages to best possible effect. This meant that the engineers had to know and understand precisely all the properties of the material, that they had to design the components accordingly and cooperate closely with the manufacturers during the implementation stage.

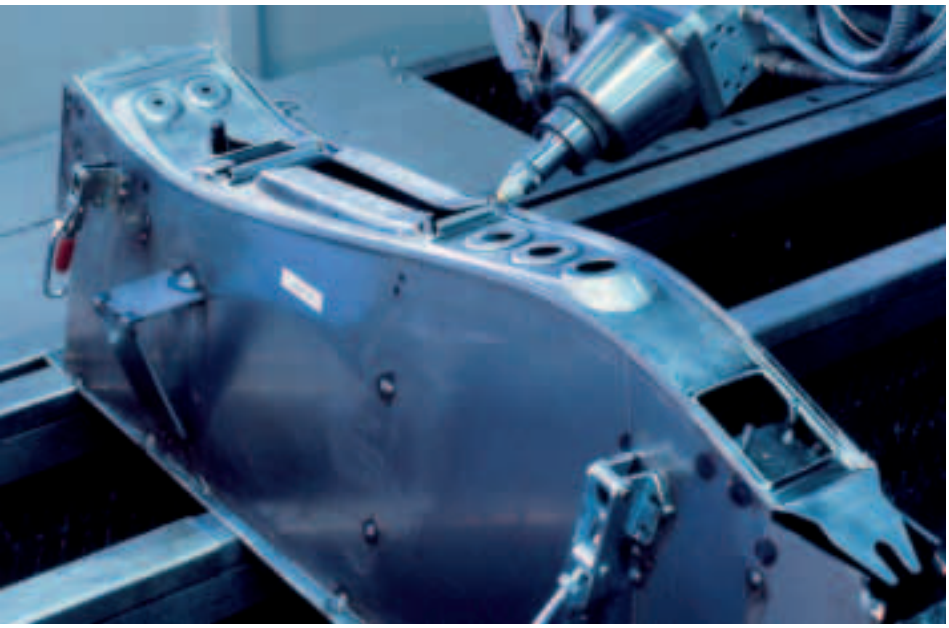

The upper and lower parts of the magnesium center console panel are soldered together.

Unlimited raw material

Magnesium occurs in the earth's crust (two percent) and in seawater (0.15 percent with a concentration of 1.3 kg/m^3). Two procedures have prevailed for the extraction of magnesium, electrolysis and thermal reduction. Electrolysis is used to extract magnesium from the raw material magnesium chloride (dolomite) and from seawater. Approximately 75 percent of magnesium is produced in this manner. Thermal reduction (thermal silicon principle) of magnesium oxide, on the other hand, is more complex, so only some 25 percent of magnesium is produced using this method.

Good material properties with thermo-forming

Previously magnesium was considered a soft and brittle material that was very difficult to work with. Consequently it was rarely used in vehicles and then generally in forged or cast form. Nowadays, the material can be processed through extrusion, casting, drop forging or deep drawing of semi-finished products. Depending on the application, alloys with various additives, for example, aluminum, tin, manganese or rare earths are used. This makes the material more fine-grained, tougher and less susceptible to corrosion.

In conventional processing, the sheet is rolled in several steps from massive bars, which are cast, milled and tempered.

The interior parts that Porsche uses in the Carrera GT, however, are manufactured using the new thermo-forming procedure.

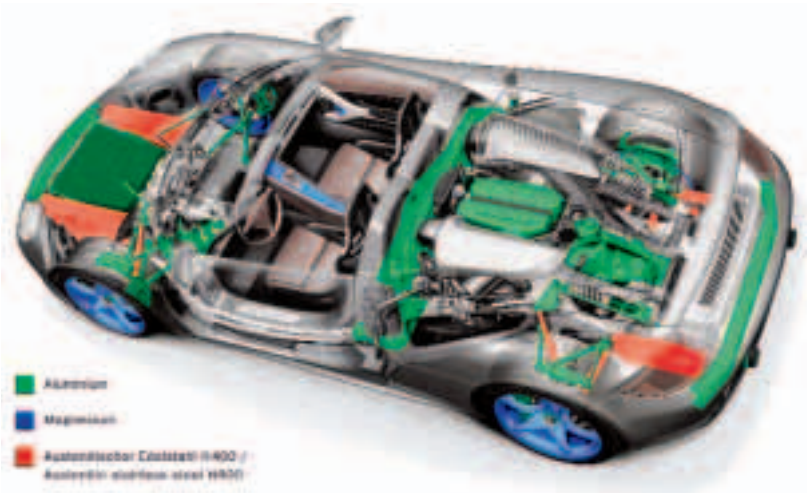

As the lightest metallic construction material available, magnesium is becoming more and more important in the field of vehicle construction.

At the same time, numerous suppliers are currently working on new processing methods; in fact a procedure is currently being tested in which the magnesium is cast flat and the resultant strips are rolled into sheets. The sheet, which is still warm, is then processed further into sheet bars. These, in turn, are shaped immediately into the desired components using deep-drawing tools. This continuous process, similar to coil manufacture, significantly reduces the manufacturing costs from sheet to component, making it possible to manufacture large quantities quickly and economically.

With the Carrera GT, Porsche became the first manufacturer to put magnesium within view of the driver.

This form of processing gives the material a whole new array of advantageous features, with the result that it is now possible to produce a wealth of new components from magnesium. Magnesium components that have been formed under heat display well-proportioned mechanical and dynamic properties and a high degree of strength. Large, thin-walled parts, for example, for the outer skin can also be produced. When compared to plastic components, heat-formed magnesium offers a higher level of thermal stability and lower thermal expansion.

With new processing procedures and the experience gained with magnesium in the development of the Carrera GT, new possibilities are opening up to Porsche engineers for the future design of vehicle components.

High-tech material of the future

Magnesium is becoming an increasingly frequent feature of vehicle construction, even in series production. Indeed, in 2002 some 80,000 tons of the material were used in automotive construction. And the demand is constantly rising. Even on a purely cosmetic level, further developed products, such as heat-pressed magnesium sheets, make a very high quality and high value impression. Consequently, we will see these parts being incorporated more frequently into car interiors in the future. Magnesium assembly carriers for dashboards, seat frames or door trims in the passenger compartment are also conceivable.

The rising demand for magnesium and the growing production quantities will have a positive long-term effect on the cost of the material. As a result, we can expect that some magnesium alloys will become significantly less expensive in the future. ■

Networked Systems in the Cayenne

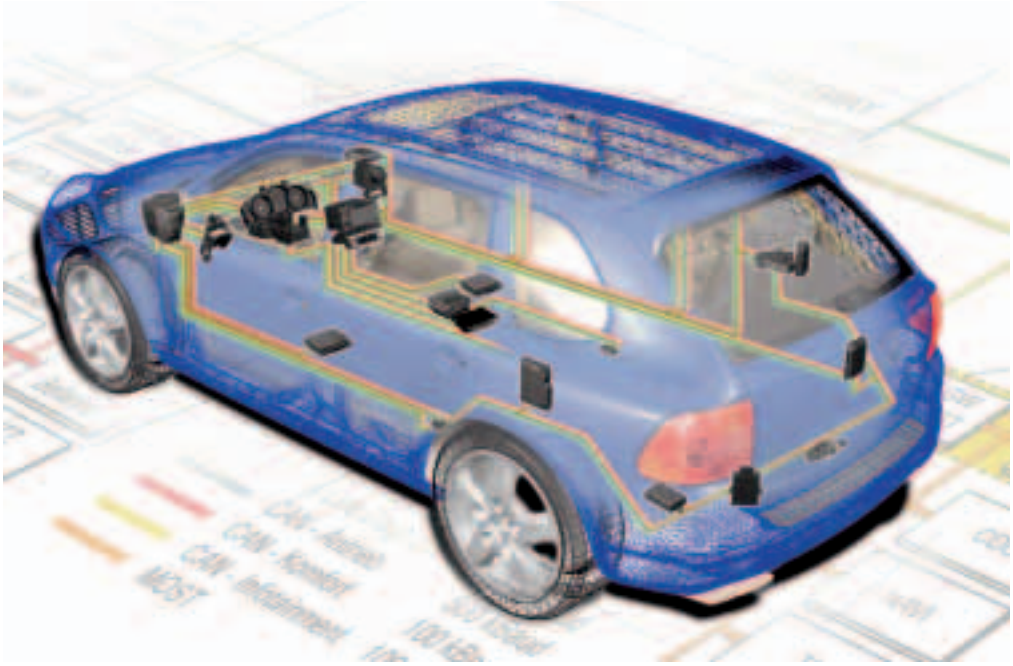

A fully networked system takes care of all electronic data exchange in the Cayenne.

With its move into the Sport Utility Vehicle segment, Porsche simultaneously struck out on a new path in terms of communication and data transmission between electronic control units in a vehicle. This path is embodied in the new optical-based technology (MOST: Media Oriented Systems Transport) which was used in the Cayenne in addition to the more familiar network architectures. Its MOST-based infotainment system makes Porsche one of the first constructors to offer a scalable and modular concept in this area.

The tide of digitalization has brought with it a wealth of data from various sources that must be transmitted and exchanged within a vehicle. Chassis and security systems (automatic transmission, brake system, etc.), comfort electronics (air-conditioning system, ParkAssist, etc.) and infotainment (navigation, radio, telephone, etc.) are reliant on electronic information, indeed they are controlled by this data. Traditional electronic concepts would not be able to cope with the high requirements that the Cayenne demands in this area, so Porsche installed a fully networked system, in which some 40 control units take care of a comprehensive range of tasks.

To ensure that the control units can communicate perfectly with one another, suitable transmission technology and a practical system architecture was required. To this end, Porsche decided to break down the complex vehicle electrical system into more manageable subsystems, in which each electrical control unit was classified accord-

ing to specific aspects. Environmental conditions (installation location), security issues (error protection, real-time), data transmission capacity, operational relevance and the specific electrical properties of the unit were among the criteria applied. On the basis of this classification, the vehicle was divided into electrical units, into the main vehicle segments and vehicle subsegments. These units are linked to one another via special gateway control units and can thus exchange data. The main vehicle segments include the areas of drive, comfort and infotainment. They are equipped with what are called system busses, which were selected in line with the relevant requirements. In addition to these system busses, there are also a number of sub-bus segments which connect the sensors and actuators locally.

Controller Area Network (CAN): Basic networking technology

CAN is used in the Cayenne as the basic technology for the drive and comfort segments. The different requirements in these areas call, inter alia, for different CAN physical layers. The CAN (Class C) used in the drive segment works at a transmission rate of 500 kBit/s and is operated via a high-speed physical layer. It supplies, for example, the automatic transmission or brake systems with the information they require. In the comfort segment the CAN (Class B) works with a transmission rate of 100 kBit/s and controls, e.g. the air-conditioning system or the ParkAssist. Here a low-speed physical layer is used.

The physical layer chosen depends on the desired transmission rate, the wakeability of the bus system and its error tolerance and error traceability. For example, a wakeable system requires a decentral network management system that allows the system to be woken by defined components in an event-controlled manner. In contrast, the drive segment is only activated upon ignition.

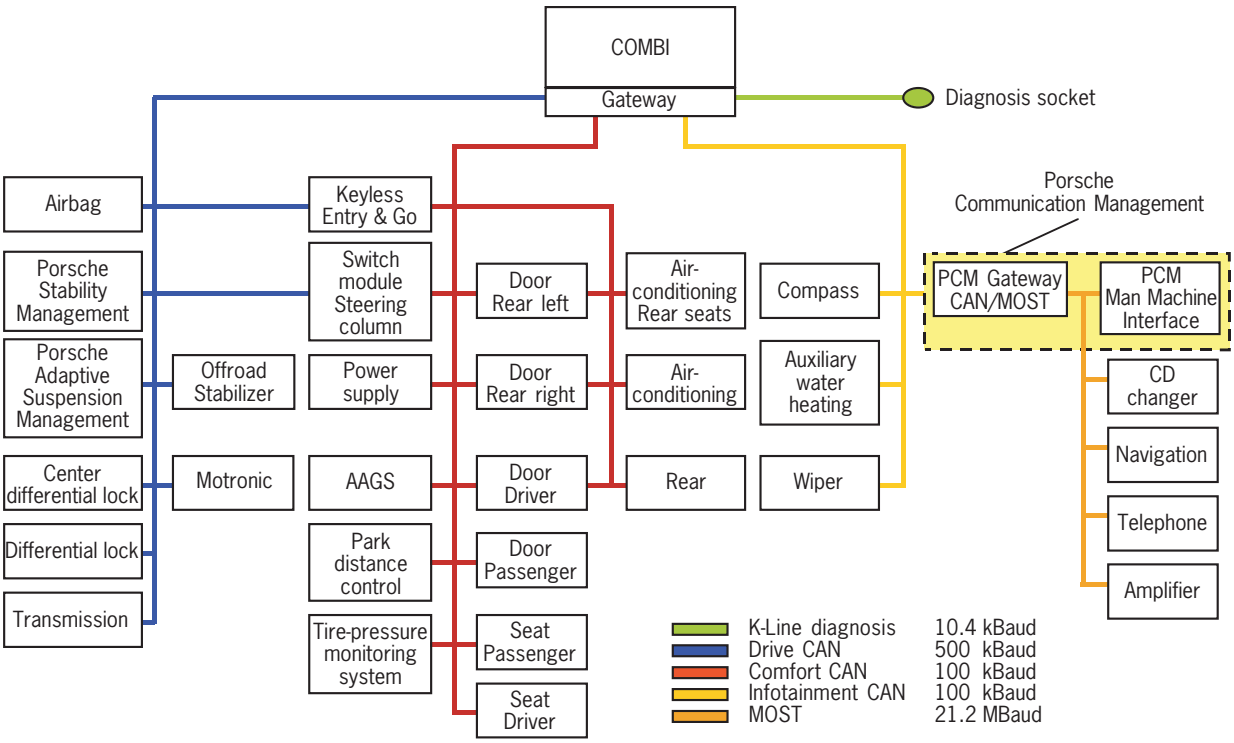

Position and arrangement of networks in the Cayenne for the drive, comfort and infotainment segments

High degree of innovation in the infotainment area

In the last few years there has been a major burst of innovation in the infotainment segment. More and more technologies and functions from the area of communications and entertainment are now being incorporated into cars. The infotainment system in the Cayenne already combines established functions – such as navigation, radio, CD and telephone – with new technologies. A uniform operation and display concept allows the driver to use this entire complex system in a safe and convenient manner. The network technology, which in addition to the new functions, also enables a modular and scalable system architecture played a key role in the development of the Cayenne infotainment system. Thus various functions can be flexibly distributed to individual components. The components, in turn, can be added or replaced as required.

In addition to control commands and status information, audio and/or graphic data streams must now be transmitted between system components at high bandwidths. Given all these requirements, MOST technology was the natural choice for the Cayenne's infotainment segment.

MOST technology: High-speed data transmission

The MOST network transmits digital data optically at high speeds via inexpensive polymer monomode optical fibers (POF). These optical fibers are arranged in a ring because of the one-way nature of the transmissions. In addition to its great speed, optical transmission technology offers two further critical advantages: it not only minimizes the disruptive electromagnetic emissions of the network, it simultaneously makes it insensitive to interference from outside.

All data is transmitted point-to-point (component to component) in the multiplex on a single fiber. This information which has been prepared for "single wire transmission" (bit sequences) is encoded in a self-clocking code (biphase mark). It is converted opto-electrically before processing by special MOST hardware (transceiver) contained in every component or electro-optically after processing, as the case may be.

The entire technology is based on a synchronous transmission mechanism, which is specially aligned to the connection and extraction of digital audio data. The data is transmitted at a fixed data rate in real time thus removing the need for a buffer in the receiver. Consequently, the information of any data sinks connected to the network is available in parallel (broadcast) and can be used simultaneously by several applications.

Packet or burst data, for example when sending SMS messages via the telephone, is transmitted via an asynchronous transmission service for which appropriate buffers are provided. The resource distribution of the bus (asynchronous/synchronous) is thus freely scaleable in many areas. In the Cayenne the MOST network is synchronized at a frequency of 44.1 kHz, producing a data transmission rate of 21.2 MBit/s. Apart from the control and monitoring information, the data transmitted is primarily audio (CD, radio), language (navigation, telephone) and graphics data (navigation map).

Following on from the success of the Cayenne launch, this new MOST technology will soon be used in the infotainment systems of the 911 and Boxster series. Porsche is thus one of the first vehicle constructors to offer a consistent, scaleable and modular concept in this area and now thanks to Porsche Engineering this know-how will also be available to customer projects.

Gateways: Data exchange across segment borders

The division of the system into sub-segments allows us to clearly delimit individual areas (for example, engine functionality for comfort electronics) and qualify them more easily. However, controlled data exchange between the segments is often required. For example, for the purposes of speed-dependent volume regulation, the infotainment area requires speed data from the drive segment. This is where gateway control units come into play. These transmit data and messages between the areas according to precisely defined specifications (routing tables). Two different gateway architectures are used in the Cayenne. The central CAN gateway guarantees fast and transparent exchange of data and messages between the CAN segments.

However, the CAN/MOST gateway integrated in Porsche Communication Management (PCM) must take many different technologies and networking philosophies into consideration. Consequently the gateway provides the MOST control unit network with the CAN data to be routed in the form of virtual MOST components (MOST facade).

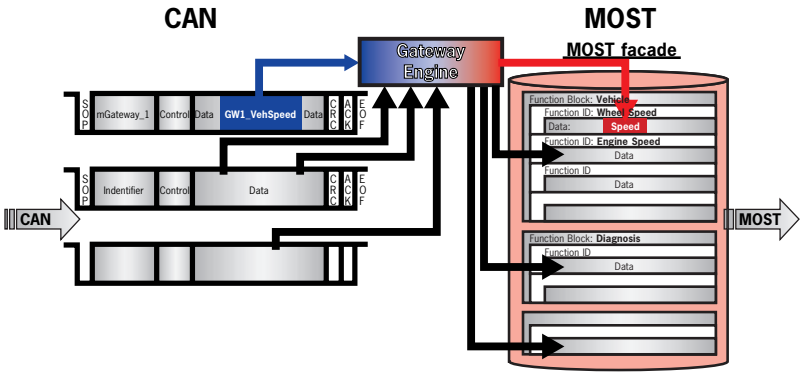

Gateway control units ensure that data can be exchanged between the different segments.

In the reverse situation, MOST messages which must be converted to CAN are transmitted according to a defined specification, either cyclically or event-controlled as required.

The implementation of the gateway is thus absolutely generic and can be flexibly configured via a special routing table containing all the conversion specifications. With regard to system extensions in the multimedia area (connection of external consumer devices, e.g. PDAs), such control units can also be used as firewalls, in order to open the system to the outside in a defined manner.

Tailored system architecture as the key to successful integration

In the past, only control commands or simple information data such as “on/off” had to be transmitted to the individual control units. However the tide of digitalization has brought with it a wealth of data that must be managed – a factor that is critical in the choice of the transmission technology and the system architecture. In order to tackle this issue head-on, the complex vehicle electrical system of the Cayenne was broken down into sub-systems, which are not only easy to integrate and qualify but are also robust and easy tomaintain. Thus an optimal balance was struck between a completely distributed system and a highly integrated one. ■

Porsche Styling: Also Available for Two-Wheels

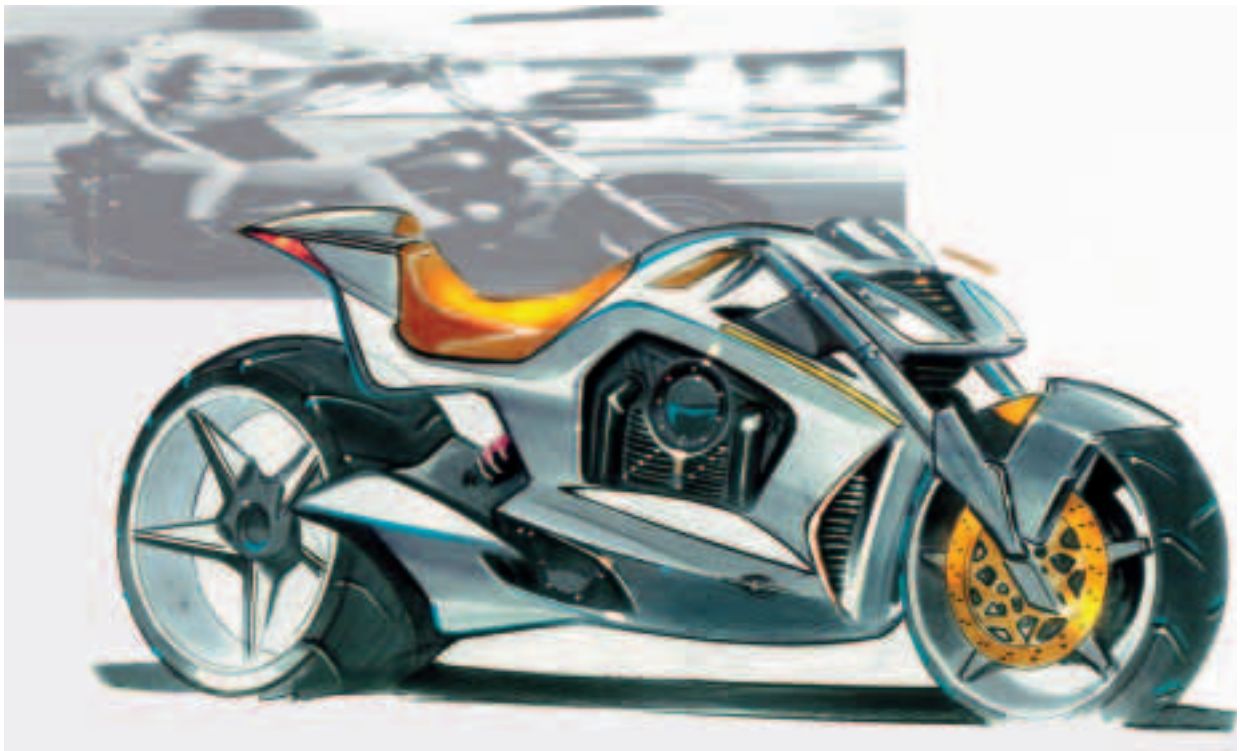

Optimal seat ergonomics and the specified arrangement of the components are the bottom line on which the designer must create an appropriate form for the bike.

In addition to designing cars and industrial products, the Porsche Design Studios in Weissach and Huntington Beach (Los Angeles) work in another interesting area: the design of motorcycles.

One could easily be forgiven for thinking that motorcycle manufacturers only discovered the concept of design in the last two decades. If you look at motorcycles built before the 1970s, it is very obvious that many parts were designed solely with function in mind. Nowadays, however, every motorcycle has its own styling features combining both function and form. Harm Lagaay, Porsche's chief designer, describes the fascination of designing motorcycles: "It is the interplay of large parts and lots of small details that create stylistic harmony in a motorcycle. In a car, it is possible to leave out individual parts in various design stages without corrupting the overall image. This is not the case with motorcycle design. Here we must always work in tandem, to ensure that all the individual parts are available for the relevant work stages. Only in this way will we get the right impression in order to further progress the project."

Design briefs:
Form follows function

Despite the fact that motorcycle designers must adhere to very strict guidelines which really do not allow a great deal of latitude there are numerous different designs that are appropriate to the different motorcycle types. The package – the arrangement of the various technical components of a motorcycle – and optimal seat ergonomics are required premises, around which the designer of a motorcycle

creates an attractive form. The defined radius of movement of the handlebars also plays an important role here. It is the handlebars, seat and footrests that connect the driver with the motorcycle, allowing the two to become one. This, however, can only happen if the driver feels comfortable and for this the stylists are responsible.

The specified motorcycle type – Cruiser, Enduro, racing or touring bike – brings its own particular requirements with respect to aerodynamics and indeed thermodynamics. An easy rider wants to be able to feel the wind on his face, the ambitious racer on the other hand demands as little air resistance as humanly possible. To this end designers are working on special trim elements that guide the flow of air around the driver in the best manner possible.

Individual motorcycle details – such as the tank – must be designed so that they combine smoothly with, and yet emphasize, the overall style.

A designer putting his ideas on paper in the “2D phase”.

In the early design phases, the arrangement of the motorcycle technology is very much the primary concern. It is essential, for example, that the heat management of the engine and the ideal management of supply and used air are designed to ensure that the driver’s enjoyment is not impaired.

From the first drawing to the model

The design of motorcycles involves comparatively large numbers of designers and model builders. This is necessary because all of the details must be developed simultaneously. Teamwork is thus essential. The team is generally managed by the designer whose design was preferred in the early phases. This person then ensures that the stylistic features and line are adhered to. As in the case of the interior design of a car, for which many details must be designed, the entire styling process for a motorcycle is likewise aligned to the complete vehicle.

If a customer commissions Porsche Engineering to design a motorcycle, the elements that are typical of the brand are discussed at the very first briefing. After that, benchmarking takes place, during which the designers study the range of motorcycles offered by the customer as well as those of potential competitors.

On the basis of these two-dimensional drawings, the customer decides what direction the style should take.

The next phase is generally termed the 2D phase, during which various designers prepare two-dimensional drawings of their interpretations, in accordance with the design brief. After a pre-selection process conducted by chief designer Harm Lagaay the drafts are presented and explained to the customer. The customer decides which direction the design should take and new designs are prepared accordingly. At the end of the 2D phase, one design is chosen. This is the one that will ultimately be realized.

The next work step is the 3D phase in which the model is created three-dimensionally using animation software, and again presented to the customer.

Once the latter grants the release, the final decision takes the form of the package and design freeze. Now the model builders can get to work on the life-size model. With a motorcycle model, it is particularly important that you can sit on it. Only in this way can the customer get a real impression of the seat ergonomics and the driving experience from an early stage. For this reason, the large modeled parts are often assembled on a motorcycle from the same family. State-of-the-art tools such as CNC milling and rapid prototyping are available to the designers during model manufacture.

Advantages that only Porsche Styling can offer

Motorcycle manufacturers can commission the complete development, from rendering through to the full-scale model, from Porsche Engineering. Competent stylists and model builders, with many years of experience in designing Porsche models and various customer commissions, also work on these projects. This broad knowledge base is an ideal foundation for new interpretations. Both Porsche Design Studios in Weissach and Huntington Beach (Los Angeles) can be commissioned if requested. This is particularly important for international customers and is an option that is regularly utilized.

The short paths in the Porsche Development Center in Weissach enable quick and simple access to cross-disciplinary functions, such as for example calculation, simulation or airflow tests. Thus ideas can be tested under the most real conditions possible in the very early stages.

More importantly the designers at the Weissach studio are not only sports car fans, they all are enthusiastic motorcyclists too. They are equally passionate about their two-wheel projects and profit, in the truest sense of the word, from their own personal experiences. ■

A Porsche Racer Without an Engine

The Porsche Soapboard is most easily described as a high-tech, three-wheeled surfboard.

The Porsche designers at the Styling Studio in Huntington Beach, Los Angeles have designed a very special racer: the Porsche soapboard. At its race debut, this soapbox caused quite a stir.

Soapbox racing is a hugely popular leisure pursuit in California. For the Gravity Car Derby Festival 2003, organized by a charity that cares for orphans, the designers at the Porsche Styling Studio in Huntington Beach came up with something a little bit special: using very high-tech materials they created a type of three-wheel surfboard. They then refined the aerodynamic behavior of the spoke wheels and attached tires with a very low rolling resistance, enabling the use of a hand brake that owes its origins to racing bikes. The chassis they made from a carbon fiber monocoque reinforced with a honeycomb core. A windscreen of vacuum-pressed acrylic directs the flow of air around the driver who lies face down on the board and a bicycle steering rod is used to steer.

The acrylic windscreen directs the flow of air around the driver. A bicycle steering rod is used to steer.

On its maiden race and with a driver chosen by lottery from a group of orphans, the Porsche soapboard took first place. This unique speedster will race again this year and after that it will be auctioned off with all proceeds going to the charity organization “America Works for Kids”. The Porsche Styling Studio in California is part of the Porsche Engineering Group. This team on the West Coast of the USA works closely with its colleagues in Weissach under the steady hand of chief designer, Harm Lagaay. In addition to vehicle design work on behalf of customers, Porsche Styling also works on industrial and product design. ■

The 911 Turbo Cabriolet – the Fastest Open Boxer on the Road

The top model in the 911 Cabriolet range guarantees the twin driving pleasures of fresh air and enormous power. The convertible top can be opened while driving at speeds of up to 50 kilometers per hour.

The 911 Cabriolet range has produced yet another top model. With its generous air inlets on the front and sides, there can be no mistake: after a 14-year famine, there is a new, open Porsche Turbo on the market. Even the statistics would bring a tear of joy to the eye. The six-cylinder Boxer engine aspirated by two superchargers supplies 309 kW (420 bhp) at 6,000 revolutions per minute. The maximum torque of 560 Newton-meters is attained between 2,700 rpm and 4,600 rpm.

Generous air inlets on the front and sides say it all: make no mistake about it, this is a Turbo car. The driving performance of the Cabriolet is practically identical to that of the Turbo Coupé.

The performances of the Cabriolet are practically identical to those of the Turbo Coupé: with its standard six-gear manual gearbox, the open Turbo can go from 0 to 100 km/h in 4.3 seconds (Coupé: 4.2 seconds). It can reach the 160 km/h mark in 9.5 seconds (Coupé: 9.3 seconds). The top speed with the convertible top closed is 305 km/h – that's the same as the Coupé.

Like the Coupé, the 911 Turbo Cabriolet comes with all-wheel drive as standard. With Porsche Stability Management also as standard, this car offers the ultimate in high-performance safety.

The body of the Turbo Cabriolet is also based on that of the Coupé, the essential differences being the targeted reinforcements, which compensate for the stabilizing effect of the sheet roof. In order to achieve maximum strengths, the design engineers opted for a new approach and used the high-strength steel, DP600. All these changes to the bodyshell combine to make it one of the most rigid Cabrio structures in the 911 range.

The Cabriolet boasts a fully-retractable roof, which can be opened or closed electro-hydraulically in some 20 seconds. However, the car does not have to be stopped to activate the roof; it can also be opened at speeds of up to 50 kph. ■

Umbrellas: Masters of the Wind Tunnel


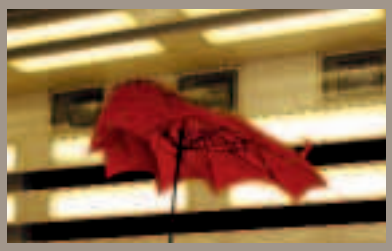


Mounted on a special bracket, the golf umbrella must withstand gusts of up to 52 kilometers per hour.

Under the watchful eye of the TÜV Rheinland, the wind stabilizers of a new generation of golf umbrella passed all tests with flying colors on the Porsche airflow test stand.

The Eberhard Göbel company of Ulm has been manufacturing umbrellas for more than 80 years. In the last few years, the company has specialized, in particular, on umbrellas for the sports and lifestyle sector. Recently, their in-house developers created wind stabilizers for their new golf umbrella, the "birdiepal". Naturally they wanted their work certified by the TÜV, so the head of the company simply contacted Porsche Engineering to book the sports car constructor's wind tunnel. "When compared to competitor products from the US which have a double coating, the birdiepal is a great deal lighter and more practical. A single coating is enough for us. In addition to the glass fiber frame, the special shaft made from drawn fibers ensures extra stability in windy conditions", explains Göbel. Talk is cheap, however, and Göbel needed to prove that his umbrella really is as sturdy under windy conditions as its heavier counterparts. Enter stage right the Porsche airflow test stand.

The entire sequence of tests was documented by video camera.

The golf umbrella was mounted on a bracket and subjected to varying wind strengths. It is worth noting here that a person can only hold an umbrella of this size up to wind force five, i.e. approximately 35 kilometers per hour. Even at that you would need to use both hands. Despite this, the bar was raised a little in the wind tunnel. The test came to an end however at a gust speed of 52 kilometers per hour when the force of the wind turned the canopy of the umbrella inside out. Nonetheless, the highly flexible glass fiber rods allowed the umbrella to spring back out again after the test without any difficulty.

At the end of the series of tests, the TÜV certified that the "birdiepal", despite its light weights of only 634 g (Euro size) and 726 g (American size), could be used without problem at wind forces of up to level six, approx. 45 kilometers per hour. ■

Wool Threads Show which Way the Wind is Blowing

Smooth and streamlined, without sharp edges or unnecessary flourishes, this is precisely how Ferry Porsche envisaged his 356 and how he had it built in Gmünd, Austria. Even then, aerodynamics played an important role.

Back in 1948 airflow was studied using very ordinary wool threads. They were simply stuck to the car and then clearly showed the airflow forces acting on the vehicle when it was in motion. The tests were worthwhile: the aerodynamics of the 1950 356 Coupé produced a cw value of 0.296.

Some 25 years later testers had moved to using the airflow test bench at the University of Stuttgart, but even then they had not completely dispensed with the wool threads. Since 1986 Porsche has been conducting their tests in their own wind tunnel in the Research and Development Center in Weissach. Using the high-precision sub-floor scale, the wind forces and torques are measured at the same time as the pressures acting on the vehicle.

Modern computer-assisted analysis equipment have not completely displaced the wool threads however: they are still used now and again to obtain information on the flow of air immediately on the surface of the vehicle. ■

Field test with wool threads: air flow tests on the 356/2 in 1948 ...

... and in 1972 in the wind tunnel at the University of Stuttgart on the 911 Carrera RS 2.7

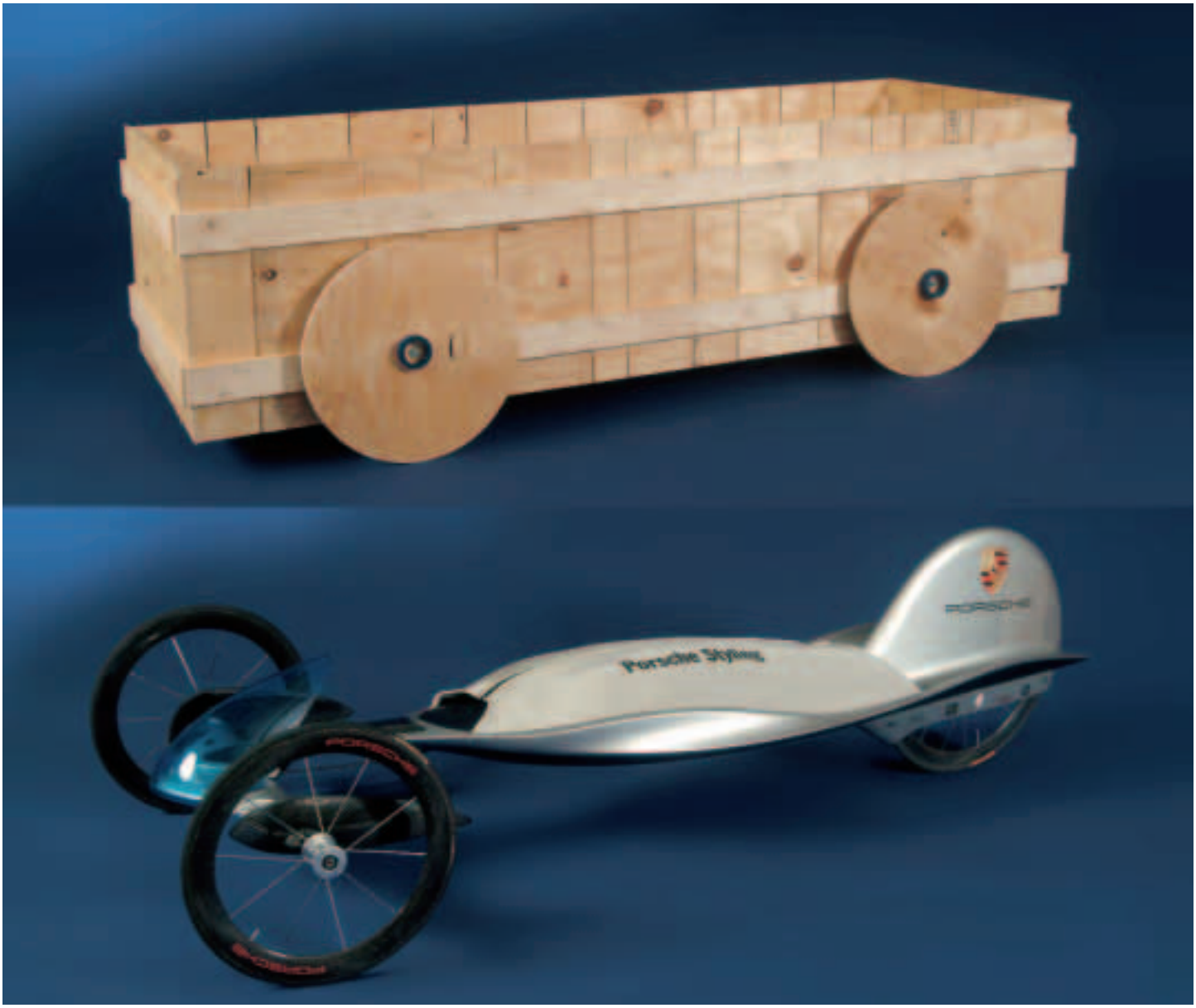

Complete Vehicle · **Styling** · Body & Safety · Engine · Drivetrain · Chassis · Electrics & Electronics · Testing · Production Support · Industrial Engineering

Soapbox, max. 8 x 3 x 3 ft, 88 pounds.
Orders can be executed.
Or interpreted victoriously.

More Information:

+49 711/911 - 4261, Fax +49 711/911 - 2777

E-Mail: peg@porsche.de

Porsche Styling

A division of Porsche Engineering

PORSCHE

Imprint

Publisher
Porsche Engineering
Group GmbH

Address
Porsche Engineering
Group GmbH
Porschestraße
D-71287 Weissach

Tel. +49 (7 11) 9 11-1 88 88
Fax +49 (7 11) 9 11-1 89 99

Email: peg@porsche.de
Internet:
www.porsche-engineering.com

Editor-in-Chief
Sabine Schröder

Editor
Jens Walther

Production
Werking
Werbekonzeption & Realisation,
Stuttgart

Print
W. Kohlhammer Druckerei
GmbH + Co, Stuttgart

Porsche Engineering
driving identities